# NASA/JAXA Ground Operations Working Group TIM #10

## Specifications for Waste Water

**Jan.31-Feb.4 2005**

**Japan Aerospace Exploration Agency**

**IHI Aerospace**

# 1. Objective

**JEM-EF test setup has the cooling loop that is used water.**

**JAXA/IA would like to confirm the documents or procedures to waste the used water.**

**Attached figures show the cooling schematics and chilling unit.**

# 4. Confirmation

- **What kind of the requirements need to waste the used water?**
  - **Documentation**
  - **Additional Process**

**GSE No.** GFM-010

**GSE NAME**: COOLANT CIRCULATION EQUIPMENT

**GSE TYPE:** Fluid System GSE

## 1.Purpose

This GSE is used to circulate the coolant to the EF active thermal control system loop through the BM (Berthing Mechanism).
This GSE can control condition of the coolant. (Pressure, Temperature, Flow)

## 2.Function

1)To control pressure of the coolant. (FC-72)
2)To control temperature of the coolant with Water Heat Exchanger.
3)To control flow rate of the coolant with flow control valve.

## 3.System Composition

・Coolant Circulation Equipment
1)Structure 2)Circulation Pump 3)Accumlator 4)Coolant Cooler
5)Control Panel
・Chiller unit
6)Structure 7)Water Pump 8)Chiller Pump 9)Water Tank 10)Chiler
11)Control Panel

## 4. Interface Information

・Coolant Circulation Equipment
Electrical Power : AC,200V,15A,3φ,50/60Hz Grounding : Applicable
Gas Fluid I/F : Coolant (FC-72/to EF BM Interface Adapter),
GHe (to Facility) Mechanical I/F : N/A

・Chiller unit
Electrical Power : AC,200V,30A,3φ,50/60Hz Grounding : Applicable
Gas Fluid I/F : Water Mechanical I/F : N/A

## 5.Compatibility with KSC clean room environment

No gas/noise emission

## 6.Contingency Requirement

N/A

## 7.Configuration

### 7.1.Flow Chart

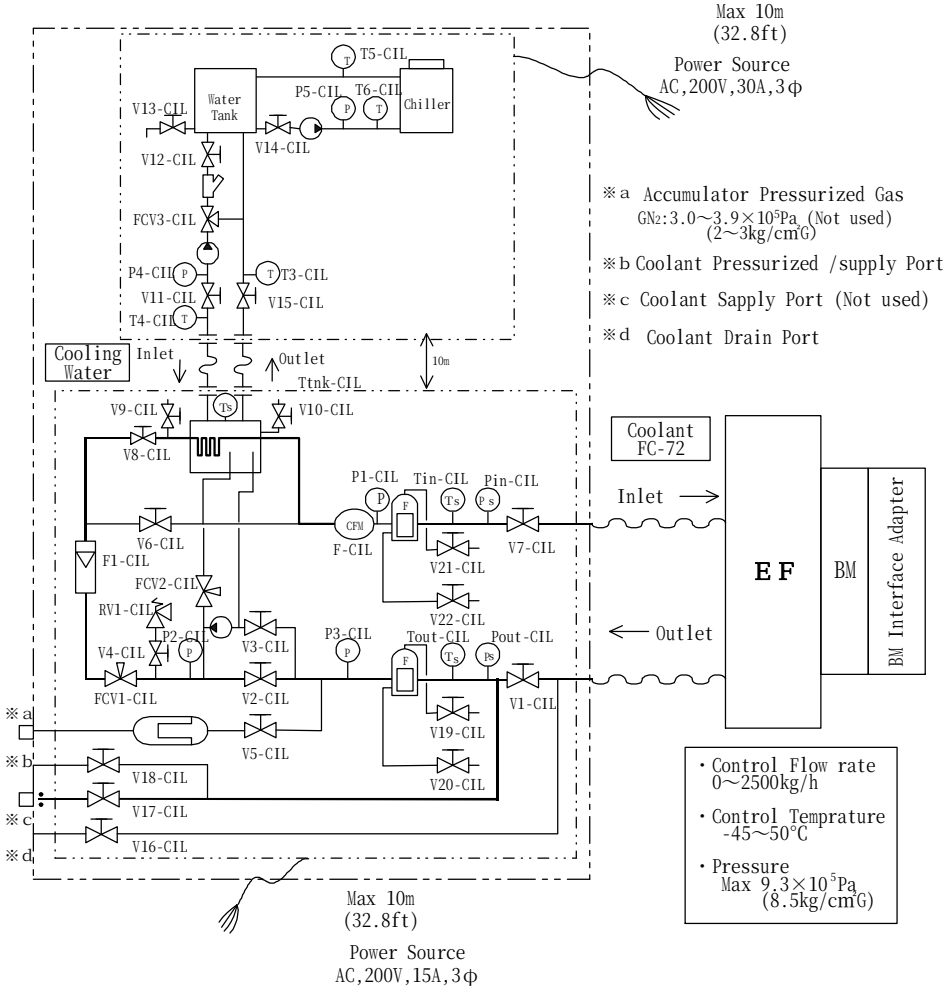


COOLANT CIRCULATION EQUIPMENT

GSE No. GFM-010

7.2.Outside Drawing

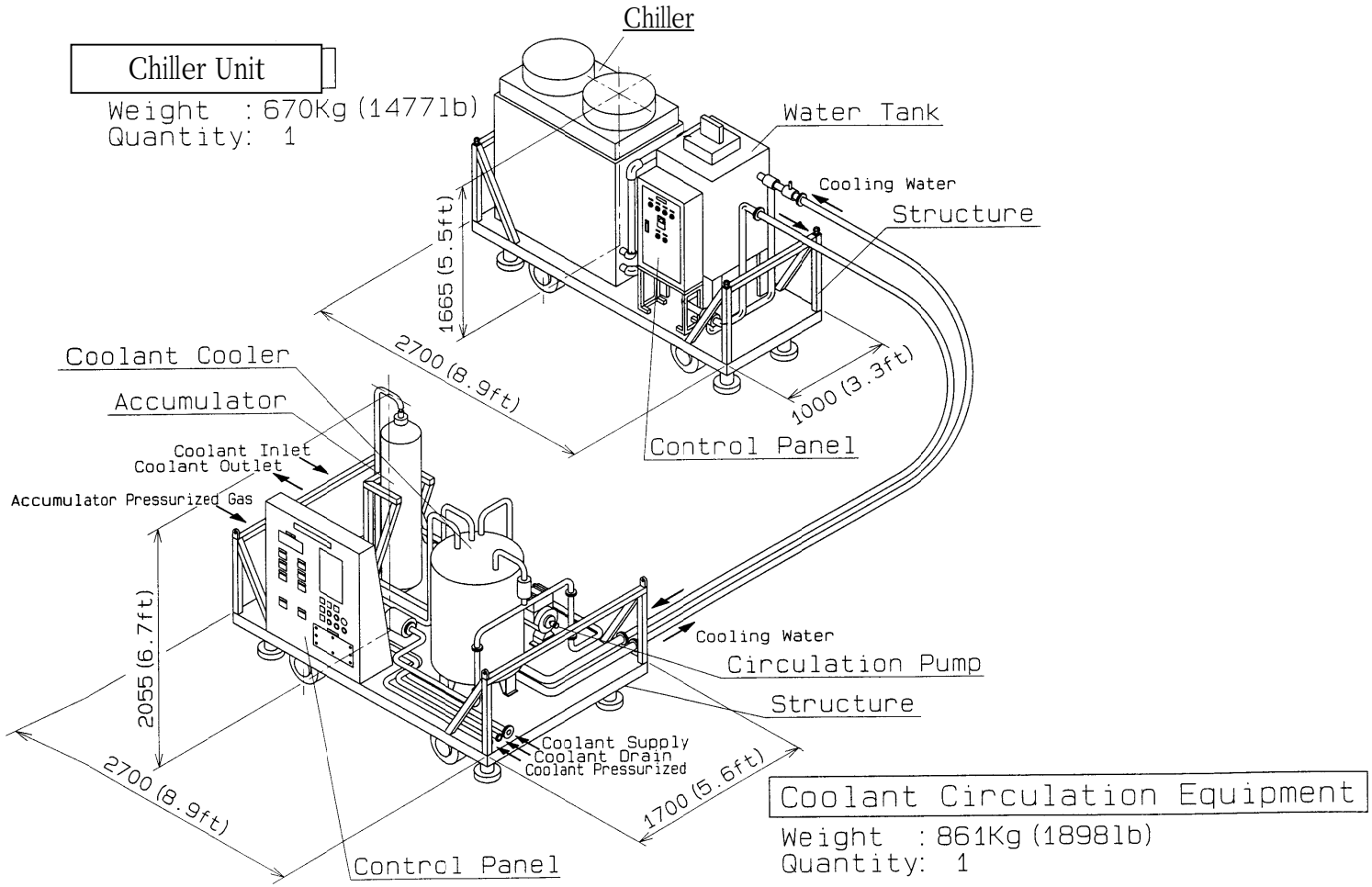


COOLANT CIRCULATION EQUIPMENT

8.Remarks

**GSE No.** GFM-011

**GSE NAME**: HUMIDITY ENVIRONMENT MAINTENANCE EQUIPMENT

**GSE TYPE:** HUMIDITY ENVIRONMENT MAINTENANCE EQUIPMENT

## 1.Purpose

This GSE is used to humidity environment maintenance to "EF"in the booth.

## 2.Function

To supply dry air for EF.
Dry air spec
Humidity:≦20%
Flux:5Nm$^3$/min

## 3.System Composition

・Dry air manufacturing unit
・Dry air cooling unit
・Booth unit

## 4. Interface Information

Electrical Power AC200V 40A 3φ 50HZ only Grounding Applicable
Coolant water I/F:To connect "Chiller Unit"of GFM-10(Coolant Equipment)

## 5.Compatibility with KSC clean room environment

No gas/noise emission

## 6.Contingency Requirement

N/A

## 7.Configuration

### 7.1.Flow Chart

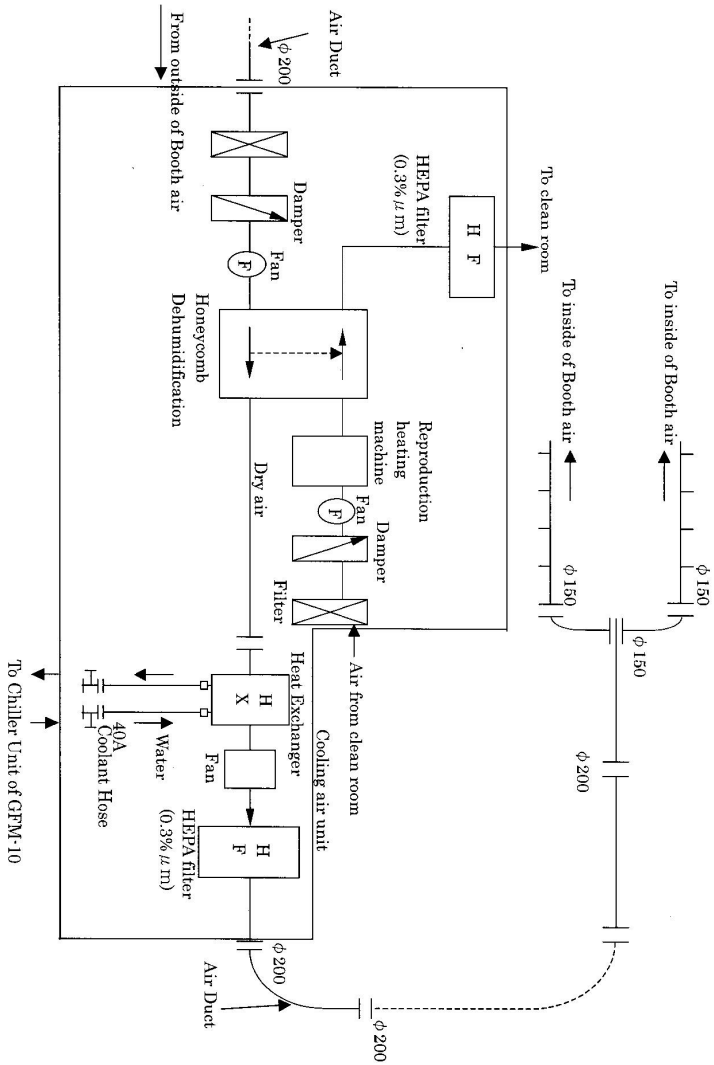

GSE No. GFM-011

7.2.Outside Drawing

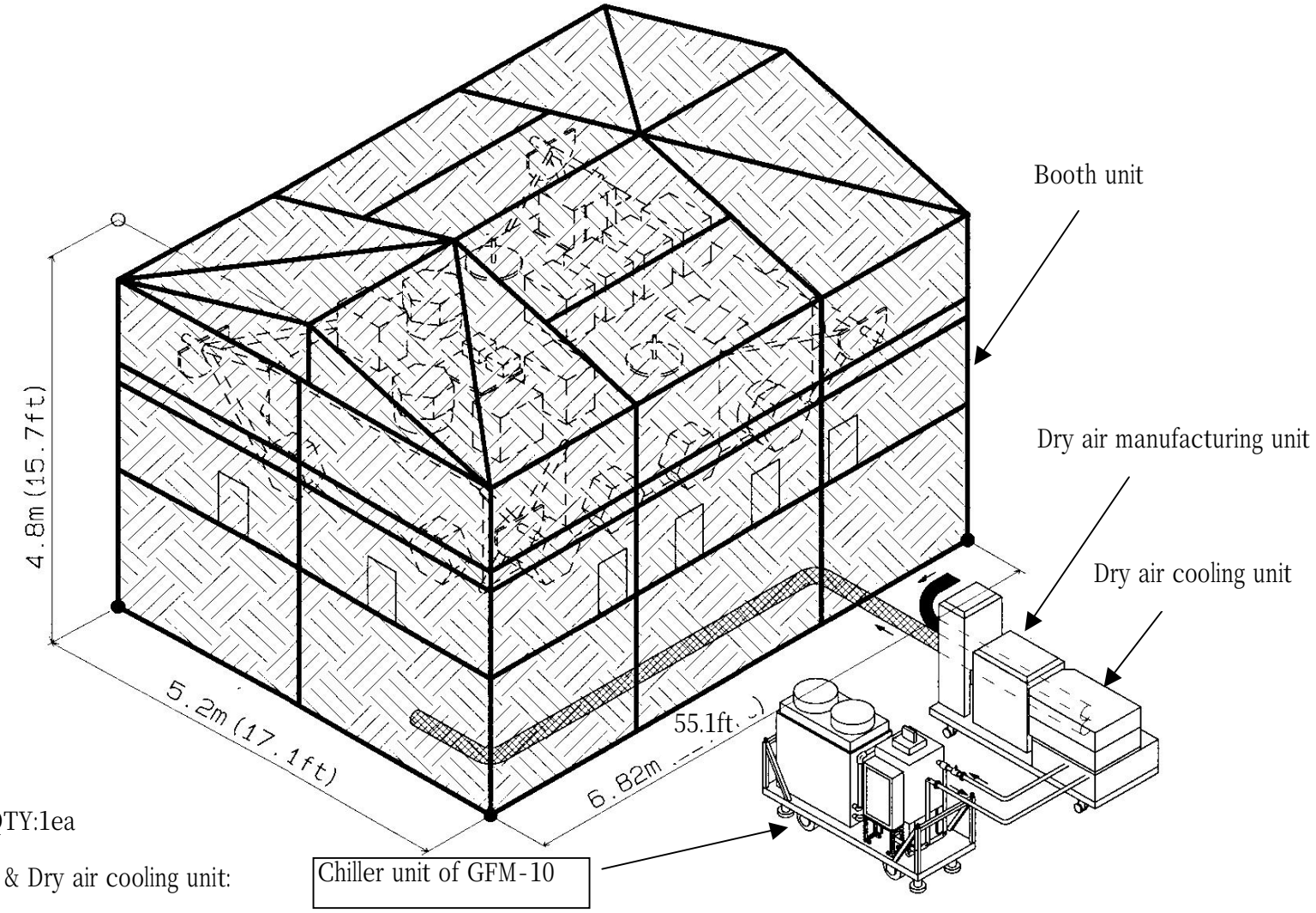


Weight
Booth Unit: 277kg(611lb) QTY:1ea

Dry Air manufacturing unit & Dry air cooling unit:
625kg (1378lb) QTY:1ea

8.Remarks
Booth unit surface is vinyl chloride (Incombustibility)
Note:Refer to the Material list